MECATORK S.A.S
ACTIONNEURS PNEUMATIQUES ¼ DE TOUR
ACTIONNEURS ELECTRIQUES
ENSEMBLES VANNES MOTORISEES
Tel : 04 50 66 70 42
Fax: 04 50 45 21 53
www.mecatork.fr

Service Instructions
Part Number: VA001-196-30, Rev. 0
Release: May 2012

Disassembly and Reassembly for CBB (Double Acting) Series Pneumatic Actuators

BETTIS

EMERSON
Process Management

MECATORK S.A.S
ACTIONNEURS PNEUMATIQUES ¼ DE TOUR
ACTIONNEURS ELECTRIQUES
ENSEMBLES VANNES MOTORISEES
Tel : 04 50 66 70 42
Fax: 04 50 45 21 53
www.mecatork.fr

Table of Contents

Section 1: Introduction

1.1 General Service Information 1
1.2 Definitions 2
1.3 General Safety Information 2
1.4 Bettis Reference Materials 3
1.5 Service Support Items 3
1.6 Lubrication Requirements 3
1.7 General Tool Information 3
1.8 Actuator Weight 4

Section 2: Actuator Disassembly

2.1 General Disassembly 5
2.2 Pneumatic Cylinder Disassembly 5
2.3 Housing Disassembly 7

Section 3: Actuator Reassembly

3.1 General Reassembly 9
3.2 Actuator Reassembly per CBB Models Listed in Step 3.1.5.1 9
3.3 Actuator Reassembly per CBB Models Listed in Step 3.1.5.2 13

Section 4: Actuator Testing

4.1 Actuator Testing 19

Section 5: Document Revision

Revision Overview 21

Appendix A: List of Tables

List of Tables 22

Appendix B: List of Drawings

B.1 Part No. VA001-005-72-3, CBBXXX Assembly Drawing 23
B.2 Part No. VA001-005-73-1, CBBXXX-M3HW Assembly Drawing 24

MECATORK S.A.S
ACTIONNEURS PNEUMATIQUES ¼ DE TOUR
ACTIONNEURS ELECTRIQUES
ENSEMBLES VANNES MOTORISEES
Tel : 04 50 66 70 42
Fax: 04 50 45 21 53
www.mecatork.fr

Section 1: Introduction

1.1 General Service Information

1.1.1 This service procedure is offered as a guide to enable general maintenance to be performed on Bettis CBB double acting series actuators. The following is a list of general CBB models numbers.

Table 1. CBB Model Numbers

MODEL (1)	MODEL (1)	MODEL (1)
315	315-M3	315-M3HW
420	420-M3	420-M3HW
520	520-M3	520-M3HW
525	525-M3	525-M3HW
725	725-M3	725-M3HW

(1) Also includes actuator models with –10 and –11 as a suffix

NOTE:
When the actuator model number has "-S" as a suffix then the actuator is special and may have some differences that may not be included in this procedure.

1.1.2 Normal recommended service interval for this actuator series is five years.

NOTE:
Storage time is counted as part of the service interval.

1.1.3 This procedure is applicable with the understanding that all electrical power and pneumatic pressure has been removed from the actuator.

1.1.4 Remove all piping and mounted accessories that will interfere with the module(s) that are to be worked on.

1.1.5 This procedure should only be implemented by a technically competent technician who should take care to observe good workmanship practices.

1.1.6 Numbers in parentheses, ( ) indicate the bubble number (reference number) used on the Bettis Assembly Drawing and Actuator Parts List.

1.1.7 When removing seals from seal grooves, use a commercial seal removing tool or a small screwdriver with sharp corners rounded off.

1.1.8 Use a non-hardening thread sealant on all pipe threads.

CAUTION: FOLLOW MANUFACTURE'S INSTRUCTIONS

Apply the thread sealant per the manufacture's instructions.

1.1.9 Bettis recommends that disassembly of the actuator should be done in a clean area on a workbench.

MECATORK S.A.S
ACTIONNEURS PNEUMATIQUES ¼ DE TOUR
ACTIONNEURS ELECTRIQUES
ENSEMBLES VANNES MOTORISEES
Tel : 04 50 66 70 42
Fax: 04 50 45 21 53
www.mecatork.fr

1.2 Definitions

⚠ WARNING:

If not observed, user incurs a high risk of severe damage to actuator and/or fatal injury to personnel.

⚠ CAUTION:

If not observed, user may incur damage to actuator and/or injury to personnel.

NOTE:

Advisory and information comments provided to assist maintenance personnel to carry out maintenance procedures.

M3:

Jackscrew or jackscrew assembly.

ES:

Extended Stop(s)

1.3 General Safety Information

1.3.1 Products supplied by Bettis, in its “as shipped” condition, are intrinsically safe if the instructions contained within this Service Instruction are strictly adhered to and executed by well trained, equipped, prepared and competent personnel.

⚠ WARNING: FOLLOW WARNING AND CAUTION SIGNS

For the protection of personnel working on Bettis actuators, this procedure should be reviewed and implemented for safe disassembly and reassembly. Close attention should be noted to the WARNINGS, CAUTIONS and NOTES contained in this procedure.

⚠ WARNING: FOLLOW COMPANY SAFETY PROCEDURES

This procedure should not supersede or replace any customer’s plant safety or work procedures. If a conflict arises between this procedure and the customer’s procedures the differences should be resolved in writing between an authorized customers representative and an authorized Bettis representative.

MECATORK S.A.S
ACTIONNEURS PNEUMATIQUES ¼ DE TOUR
ACTIONNEURS ELECTRIQUES
ENSEMBLES VANNES MOTORISEES
Tel : 04 50 66 70 42
Fax: 04 50 45 21 53
www.mecatork.fr

1.4 Bettis Reference Materials

1.4.1 CBBXXX Assembly Drawing use part number VA001-005-72-3.

1.4.2 CBBXXX-M3HW Assembly Drawing use part number VA001-005-73-1.

1.5 Service Support Items

1.5.1 Bettis Service Kit.

1.5.2 Commercial leak testing solution.

1.5.3 Non-hardening thread sealant.

1.6 Lubrication Requirements

1.6.1 The actuator should be re-lubricated at the beginning of each service interval using the following recommended lubricants.

NOTE:

Lubricants other than those listed in steps 1.6.2 should not be used without prior written approval of Bettis Product Engineering. The lubricant item number on some assembly drawings is item (5) while the Bettis service kits lubricant item number is item number (500).

1.6.2 All temperature services (-50°F to +350°F)/(-45.5°C to 176.6°C) use Bettis ESL-5 lubricant. ESL-5 lubricant is contained in the Bettis Module Service Kit in tubes and the tubes are marked ESL-4,5 & 10 lubricant.

1.7 General Tool Information

1.7.1 All threads on CBB series actuators are Inch Unified and NPT.

1.7.2 All tools/Hexagons are American Standard inch. Two adjustable wrenches, Allen wrench set, small standard screwdriver with sharp edges rounded off, medium size standard screwdriver, diagonal cutting pliers, external snap ring pliers, flat file, drive ratchet / deepwell socket set and torque wrench (up to 2,000 inch pounds / 226 N-m).

MECATORK S.A.S
ACTIONNEURS PNEUMATIQUES ¼ DE TOUR
ACTIONNEURS ELECTRIQUES
ENSEMBLES VANNES MOTORISEES
Tel : 04 50 66 70 42
Fax: 04 50 45 21 53
www.mecatork.fr

1.8 Actuator Weight

Table 2. Actuator Weight

Actuator Model	Approximate weight (1)		Actuator Model	Approximate weight (1)	
CBB	LB	KG	CBB	LB	KG
315	20	9.1	520-M3HW	38	17.2
315-M3	23.2	10.5	525	44	20
315-M3HW	25	11.3	525-M3	50	22.7
420	22	10	525-M3HW	56	25.4
420-M3	29.4	13.4	725	68	31
420-M3HW	33	15	725-M3	75	34
520	28	12.7	725-M3HW	81	37
520-M3	34.4	15.7			

(1) Weight is for bare actuator without accessories or valve adaptation.

MECATORK S.A.S
ACTIONNEURS PNEUMATIQUES ¼ DE TOUR
ACTIONNEURS ELECTRIQUES
ENSEMBLES VANNES MOTORISEES
Tel : 04 50 66 70 42
Fax: 04 50 45 21 53
www.mecatork.fr

Section 2: Actuator Disassembly

2.1 General Disassembly

⚠ WARNING: DANGEROUS GAS AND/OR LIQUIDS

It is possible, that the actuator may contain a dangerous gas and/or liquids. Ensure that all proper measures have been taken to prevent exposure or release of these types of contaminants before commencing any work.

⚠ CAUTION: DO NOT EXCEED OPERATING PRESSURE

Pressure applied to the actuator is not to exceed the maximum operating pressure rating listed on the actuator name tag.

NOTE:

Before starting the general disassembly of the actuator it is a good practice to operate actuator with the pressure used by the customer to operate the actuator during normal operation. Notate and record any abnormal symptoms such as jerky or erratic operation.

2.1.1 Remove all operating pressure from actuator.

2.1.2 Record the settings of stop screw or M3 jackscrews (1-70) and (4-30) before stop screws are loosened or removed.

NOTE:

In place of stop screws the actuator may be equipped with one or two ES (ES = Extended Stops) or M3/M3HW (1-70) located on outboard end of housing (1-10) and M3/M3HW (4-30) on the end cap (4-20).

2.2 Pneumatic Cylinder Disassembly

NOTE:

Review Section 2 steps 2.1.1 through 2.1.2 before proceeding with cylinder disassembly.

2.2.1 Remove hex nut (4-40) as follows: CBB315 through CBB725 standard end cap stop screw or extended stop (ES) use step 2.2.1.1. CBB315 through CBB725 with -M3 or -M3HW use step 2.2.1.2.

MECATORK S.A.S
ACTIONNEURS PNEUMATIQUES ¼ DE TOUR
ACTIONNEURS ELECTRIQUES
ENSEMBLES VANNES MOTORISEES
Tel : 04 50 66 70 42
Fax: 04 50 45 21 53
www.mecatork.fr

2.2.1.1 **For CBB315 through 725:** end cap stop screw or extended stop screw (ES)

2.2.1.1.1 Loosen and remove hex nut (4-40) and washer (4-90) from stop screw (4-30) located in end cap (4-20).

2.2.1.1.2 Remove stop screw (4-30) from the end cap (4-20).

2.2.1.2 **For CBB315/420/520/525/725-M3 or M3HW:**

2.2.1.2.1 Remove retainer ring (12-30) and groove pin (12-20) from optional hex drive hub or from hand wheel (12-10).

2.2.1.2.2 Remove optional hex drive hub or hand wheel (12-10) from M3 jackscrew (1-70).

2.2.1.2.3 Loosen and remove hex nut (4-40) from M3 jackscrew (1-70).

NOTE:

CBB315/420/520/525/725-M3 or M3HW models the M3 jackscrew (1-70) can not be removed now. The M3 used in these models can be removed later in this procedure using step 2.2.8.

NOTE:

ES (4-30), stop screw (4-30) or CBB315-M3 (1-70) does not require removal from end cap (4-20) unless replacing with a new ES, stop screw or M3.

2.2.2 Remove housing side hex nut (8-20) from center bar (8-10).

2.2.3 Remove outer end cap (4-20) with center bar (8-10) from outboard end of cylinder (4-10).

2.2.4 While holding housing torque shaft (1-30), pull cylinder (4-10) away from housing (1-10).

2.2.5 Slide cylinder (4-10) over piston seal (5-40) and remove.

2.2.6 Remove piston (4-50) from housing (1-10).

NOTE:

Piston (4-50) is an assembly made up of one roll pin and one yoke pin; do not attempt to disassemble the piston assembly.

2.2.7 On actuator models CBB415/520 /725 remove cylinder adapter (4-15) from flange of housing (1-10).

2.2.8 M3 JACKSCREW REMOVAL FROM END CAP (4-20).

2.2.8.1 CBB315/415 with a M3 remove M3 jackscrew (4-30) from the backside of end cap (4-20).

2.2.8.2 CBB420/520/525/725 with a M3 jackscrew remove per following steps.

2.2.8.2.1 Remove retainer ring (5-60) from M3 adapter (4-55).

2.2.8.2.2 Remove M3 adapter (4-55) from end cap (4-20).

NOTE:

The M3 adapter will be removed from backside of end cap (4-20) with the M3 jackscrew.

NOTE:

ES (4-30), stop screw (4-30) or CBB315-M3 jackscrew (1-70) does not require removal from end cap (4-20) unless replacing with a new ES, stop screw or M3.

2.3 Housing Disassembly

NOTE:

Review Section 2 steps 2.1.1 through 2.1.2 before proceeding with housing disassembly.

2.3.1 Remove hex nut (1-80) as follows: CBB315 through 725 standard housing stop screw or extended stop (ES) use step 2.3.1.1. CBB315-M3/M3HW through CBB725-M3/M3HW use step 2.3.1.2.

2.3.1.1 CBB315 through 725 housing stop screw or extended stop screw (ES)

2.3.1.1.1 Loosen and remove hex nut (1-80) and csk washer (2-35) from stop screw (1-70) located in housing (1-10).

2.3.1.1.2 Remove stop screw (1-70) from the end of housing (1-10).

2.3.1.2 CBB315/420/520/525/725-M3 or M3HW

2.3.1.2.1 Remove retainer ring (12-30) and groove pin (12-20) from optional hex drive hub or from hand wheel (12-10).

2.3.1.2.2 Remove optional hex drive hub or hand wheel (12-10) from M3 jackscrew (1-70).

2.3.1.2.3 Loosen and remove hex nut (1-80) from M3 jackscrew (1-70).

NOTE:

CBB315, 420, 520, 525, 725-M3 or M3HW models the M3 can not be removed now. The M3 used in these models can be removed later in this procedure using steps 2.3.7 or 2.3.8.

NOTE:

Stop screw (1-70) does not require removal from the housing (1-10) unless replacing with a new ES, stop screw or M3.

2.3.2 Remove both retaining rings (1-60) from torque shaft (1-30). Remove washers (1-65) from housing.

2.3.3 The following steps may be required before disassembly can continue.

2.3.3.1 If torque shaft (1-30) has any raised burrs or sharp edges they should be removed.

NOTE:

When removing burrs and sharp edges, remove as little metal as possible.

2.3.3.2 If there is excessive paint build-up on torque shaft (1-30) it should be removed in order to remove the washers.

2.3.4 Remove the torque shaft (1-30) by pushing it out one side of housing (1-10).

2.3.5 Remove yoke key (1-40) and yoke key spring (1-50) from torque shaft (1-30).

2.3.6 Remove yoke (1-20) from housing (1-10).

2.3.7 Actuator models CBB315/415 with a M3 or M3HW mounted in the outboard end of housing (1-10) remove M3 jackscrew (1-70) from housing (1-10).

NOTE:

The M3 jackscrew (1-70) will be removed from the inside of housing (1-10).

MECATORK S.A.S
ACTIONNEURS PNEUMATIQUES ¼ DE TOUR
ACTIONNEURS ELECTRIQUES
ENSEMBLES VANNES MOTORISEES
Tel : 04 50 66 70 42
Fax: 04 50 45 21 53
www.mecatork.fr

2.3.8 Actuator models CBB420/520/525/725 with a M3 or M3HW mounted in the outboard end of housing (1-10) complete steps 2.3.8.1 and 2.3.8.2.

2.3.8.1 Remove retainer ring (2-40) from M3 adapter (1-90).

2.3.8.2 Remove M3 adapter (1-90) from housing (1-10).

NOTE:

The M3 adapter will be removed from the inside of housing (1-10) with the M3 jackscrew (1-70).

MECATORK S.A.S
ACTIONNEURS PNEUMATIQUES ¼ DE TOUR
ACTIONNEURS ELECTRIQUES
ENSEMBLES VANNES MOTORISEES
Tel : 04 50 66 70 42
Fax: 04 50 45 21 53
www.mecatork.fr

Section 3: Actuator Reassembly

3.1 General Reassembly

⚠ CAUTION: CHECK SHELF LIFE OF SEALS

Only new seals that are still within the seals expectant shelf life should be installed into the actuator being refurbished.

3.1.1 Remove and discard all old seals and gaskets.

3.1.2 All parts should be cleaned to remove all dirt and other foreign material prior to inspection.

3.1.3 All parts should be thoroughly inspected for excessive wear, stress cracking, galling and pitting. Attention should be directed to threads, sealing surfaces and areas that will be subjected to sliding or rotating motion. Sealing surfaces of the cylinder, torque shaft and center bar must be free of deep scratches, pitting, corrosion and blistering or flaking coating. There are two O-Rings on the torque shaft and two extra O-Rings beneath the washers on the housing. These items MUST be replaced upon re-assembly.

⚠ CAUTION: REPLACE WITH NEW PARTS

Actuator parts that reflect any of the above listed characteristics may need replacement with new parts.

3.1.4 **INSTALLATION LUBRICATION INSTRUCTIONS:** Use the correct lubrication as defined in Section 1 step 1.6.

3.1.4.1 Before installation, lightly coat with approved grease, all moving parts.

3.1.4.2 Lightly coat all seals with lubricant, before installing into seal grooves.

3.1.5 **REASSEMBLE THE ACTUATOR MODELS PER THE FOLLOWING LISTING:**

3.1.5.1 Reassemble the following models per steps 3.2: CBB315/420/520/525 and CBB725.

3.1.5.2 Reassemble the following models per steps 3.3: CBB315-M3, 315-M3HW, 420-M3, 520-M3, 525-M3 and CBB725-M3 (also included M3 jackscrew with hand wheels i.e. M3HW).

3.2 Actuator Reassembly per CBB Models Listed in Step 3.1.5.1

NOTE:

Review Section 3 steps 3.1.1 through 3.1.5 before proceeding with actuator reassembly.

The following steps used to reassemble the following models: CBB315, 420, 520, 525 and 725. Use assembly drawing part numbers VA-001-005-72 for this section.

In section 3.2 where the step indicates to “lubricate, coat or apply lubricant”, use lubricant as identified in Section 1 step 1.6 for lubricating the part being installed.

MECATORK S.A.S
ACTIONNEURS PNEUMATIQUES ¼ DE TOUR
ACTIONNEURS ELECTRIQUES
ENSEMBLES VANNES MOTORISEES
Tel : 04 50 66 70 42
Fax: 04 50 45 21 53
www.mecatork.fr

3.2.1 Apply a coating of lubricant to the torque shaft holes located on each side of housing (1-10).

3.2.2 Prior to installing new seals: Fit the torque shaft snap ring groove with installation rings that come with the CBB service kits. These rings help guide the torque-shaft through the housing and seals which will prevent seal damage. It is a good idea to first take out both old seals, then install the rings onto the shaft, and then install seals in housing. Once this is done, remove install rings and proceed.

3.2.3 Coat the o-ring seal (2-20) with grease upon installation.

NOTE:

The cup/lip of torque shaft seal will be installed facing inward into the housing.

3.2.4 Coat yoke (1-20) with lubricant and install into housing (1-10). Apply a generous amount of lubricant to the slots in the arms of yoke (1-20).

3.2.5 Insert the yoke key spring (1-50), with the ends pointing down, into the slot in the torque shaft (1-30) and place the yoke key (1-40) on top of the spring with the tapered side outward.

⚠ WARNING: FOLLOW YOKE KEY INSTALLATION STEPS

If the yoke key (1-40) is installed incorrectly the housing may be damaged when next disassembly occurs. Refer to assembly drawing for correct yoke key spring and yoke key orientation.

3.2.6 Hold the yoke key (1-40) down with your thumb; insert the torque shaft (1-30) by gently rotating it into the housing (1-10) and yoke (1-20) on the opposite side of the installed o-ring seal (2-20).

NOTE:

Torque Shaft should be installed with key rotated 180 degrees opposite yoke key slot. When the torque shaft (1-30) is flush with the housing (1-10) push the torque shaft (1-30) through until the empty seal groove is exposed. Install the other torque shaft wiper seal (2-20) into the groove.

NOTE:

The cup of the torque shaft wiper seal again needs to be installed facing inward into the housing.

NOTE:

Two new retaining rings (1-60) are contained in the Bettis CBB Service Kits.

3.2.7 Install one of the new retaining ring (1-60) and washer (1-65) onto the exposed end of the torque shaft, making certain it is properly seated in the groove of the torque shaft (1-30). Gently push and rotate the torque shaft (1-30) until the retaining ring (1-60) is pressed against the housing (1-10). Install the other retaining ring (1-60) and washer (1-65) to the other side of the torque shaft (1-30).

⚠ CAUTION: CHECK YOKE KEY ALIGNMENT

Rotate the torque shaft until the yoke key snaps into the yoke keyway.

3.2.8 Rotate the torque shaft (1-30) so that the arms of yoke (1-20) point out the open end of housing (1-10).

3.2.9 Coat O-ring seal (5-20) with lubricant and install into inner diameter seal groove located in the center bar hole of housing (1-10).

3.2.10 Coat entire length of center bar (8-10) with lubricant including the threads.

3.2.11 Install hex nut (8-20) onto one end of center bar (8-10).

3.2.12 Insert center bar (8-10) into the center hole of housing (1-10). Slide center bar through housing until the hex nut (8-20) is flush against housing (1-10).

3.2.13 Coat one o-ring seal (5-10) with lubricant and install onto outer diameter flange located on housing adapter end of housing (1-10).

3.2.14 Actuators equipped with cylinder adapter (4-15), models CBB520/725, do steps as follows:

3.2.14.1 Install cylinder adapter (4-15) onto the flange of housing (1-10) and over o-ring seal (5-10), with the stepped outer diameter, of cylinder adapter (4-15), facing away from housing (1-10).

3.2.14.2 Install one o-seal (5-15) onto stepped diameter of cylinder adapter (4-15).

3.2.15 Coat the following areas of piston (4-50) with lubricant: The outer diameter seal groove, inner diameter seal groove, head of piston and exposed ends of yoke pin.

3.2.16 Coat o-ring seal (5-20) with lubricant and install in the internal seal groove in the head of piston (4-50).

3.2.17 Coat piston seal (5-40) with lubricant and install into outer diameter seal groove of piston (4-50). The piston seal will fit very loosely in the outer diameter seal groove.

3.2.18 Install bushing (4-80) between the two arms of yoke (1-20).

3.2.19 With the piston head facing away from housing (1-10) and with yoke pin up, install piston (4-50) onto center bar (8-10).

3.2.20 Carefully slide piston (4-50) along center bar (8-10) until yoke pin engages the two slots in the arms of yoke (1-20).

NOTE:

While holding the center bar flush against the housing, push piston (4-50) into housing (1-10) as far as the piston will go. Check to see that bushing (4-80) is positioned between the yoke (1-20) and the stem of piston (4-50).

3.2.21 Apply a coating of lubricant to entire bore of cylinder (4-10).

3.2.22 Pneumatic cylinder installation:

3.2.22.1 For CBB520 and 725 models, install the lubricated cylinder (4-10) over the piston and up-against the o-ring seal (5-15) on the stepped diameter flange of cylinder adapter (4-15).

3.2.22.2 For CBB315, 420 and 525 models, install the lubricated cylinder (4-10) over the piston and up-against the o-ring seal (5-10) on the flange of housing (1-10).

MECATORK S.A.S
ACTIONNEURS PNEUMATIQUES ¼ DE TOUR
ACTIONNEURS ELECTRIQUES
ENSEMBLES VANNES MOTORISEES
Tel : 04 50 66 70 42
Fax: 04 50 45 21 53
www.mecatork.fr

3.2.23 End cap seal installation.

3.2.23.1 Coat O-ring seal (5-20) with lubricant and install in the internal seal groove of end cap (4-20).

3.2.23.2 Install O-ring seal (5-15) onto outer diameter of end cap (4-20).

3.2.24 Install end cap (4-20) onto center bar (8-10) and into cylinder (4-10).

NOTE:

Position the end cap (4-20) so that the inlet port is at the bottom and the ES or stop screw (4-30) is at the top.

⚠ WARNING: FOLLOW END CAP INSTALLATION STEPS

If step 3.3.24 is not completed as described, the center bar O-ring seals (5-20) may become a source of pressure leakage and cause the actuator to fail.

3.2.25 Install the second hex nut (8-20) onto the cylinder end of center bar (8-10). Adjust the two hex nuts (8-20) such that the approximate same number of threads is exposed on the ends of the center bar (8-10).

⚠ WARNING: DO NOT ALLOW END CAP TO ROTATE

Do not allow end cap (4-20) to rotate during center bar tightening. The end cap must maintain the position as described in step 3.2.23.

3.2.26 Tighten center bar (8-10) to the proper torque as specified in the following chart.

Table 3. Tightning Torque Center Bar

CBB Actuator Model	Maximum Torque	
	FT. LBS.	N-m
315	55	75
420 AND 520	100	136
525 AND 725	130	176

3.2.27 If removed install ES or stop screw (4-30) into end cap (4-20).

3.2.28 Install O-ring seal (5-30) onto the ES or stop screw (4-30). Install the O-ring seal against the end cap (4-20).

3.2.29 Install new washer (4-90) onto the ES or stop screw (4-30). Install the washer against the end cap (4-20).

3.2.30 Install hex nut (4-40) onto stop screw (4-30)

NOTE:

Leave hex nut hand tight.

3.2.31 If removed install ES or stop screw (1-70) into housing (1-10).

3.2.32 Install o-ring seal (2-30) and csk washer (2-35) onto the ES or stop screw (1-70). Install O-ring seal against the housing (1-10).

3.2.33 Install hex nut (1-80) onto ES or stop screw (1-70). Leave hex nut hand tight.

3.2.34 Adjust both stop screws or ES (1-70) and (4-30) back to setting recorded in Section 2 step 2.1.2 under General Disassembly. Tighten both hex nuts (4-40) and (1-80) securely, while holding the ES or stop screws in place/position,

3.3 Actuator Reassembly per CBB Models Listed in Step 3.1.5.2

NOTE:

The following steps are used to reassemble the models: CBB315-M3, CBB420-M3, CBB520-M3, CBB525-M3 and CBB725-M3 (also included M3 jackscrew with hand wheels i.e. M3HW). Use assembly drawing part number VA001-05-73 for this section.

In section 3.3 where the step indicates to “lubricate, coat or apply lubricant”, use lubricant as identified in Section 1 step 1.6 for lubricating the part being installed.

3.3.1 **M3 JACKSCREW (1-70) HOUSING INSTALLATION FOR** CBB315/415-M3 AND CBB315/415-M3HW MODEL ACTUATORS.

3.3.1.1 Apply a light coating of lubricant to the threads of M3 jackscrew (1-70).

NOTE:

M3 jackscrew (1-70) will be installed from the inside of housing (1-10).

3.3.1.2 Insert and rotate M3 jackscrew (1-70) into housing (1-10).

NOTE:

Rotate the M3 jackscrew into the housing until the inboard end of the M3 jackscrew is up against the inside of housing (1-10).

3.3.1.3 Install O-ring seal (2-30) onto M3 jackscrew (1-70).

NOTE:

Move the O-ring seal (2-30) down the M3 jackscrew until it is next to the housing (1-10).

3.3.1.4 Install hex nut (1-80) and csk washer (2-35) onto M3 jackscrew (1-70).

NOTE:

Rotate the hex nut down the M3 jackscrew until it is next to the housing (1-10).

3.3.1.5 Continue reassembly at step 3.3.3.

MECATORK S.A.S
ACTIONNEURS PNEUMATIQUES ¼ DE TOUR
ACTIONNEURS ELECTRIQUES
ENSEMBLES VANNES MOTORISEES
Tel : 04 50 66 70 42
Fax: 04 50 45 21 53
www.mecatork.fr

3.3.2 **M3 JACKSCREW HOUSING INSTALLATION FOR** CBB420-M3 THRU CBB725-M3 MODEL ACTUATORS (includes –M3HW models).

3.3.2.1 Apply a coating of lubricant to outer diameter and inner diameter threads of M3 adapter (1-90).

3.3.2.2 Coat O-ring seal (2-45) with lubricant and install into outer diameter seal groove located in the M3 adapter (1-90).

3.3.2.3 Apply a light coating of lubricant to the threads of M3 jackscrew (1-70).

3.3.2.4 Insert and rotate M3 jackscrew (1-70) into M3 adapter (1-90).

NOTE:

Rotate the M3 jackscrew into the adapter until the inboard end of the jackscrew is up against the adapter.

NOTE:

M3 adapter (1-90) will be installed from the inside of housing (1-10).

3.3.2.5 Install M3 adapter (1-90) into housing (1-10).

3.3.2.6 Install retainer ring (2-40) into outboard groove located on the outer diameter of M3 adapter (1-90).

3.3.2.7 Install O-ring seal (2-30) onto M3 jackscrew (1-70).

NOTE:

Move the O-ring seal (2-30) down the M3 jackscrew until it is next to the M3 adapter.

3.3.2.8 Install hex nut (1-80) and csk washer (2-35) onto M3 jackscrew (1-70).

NOTE:

Rotate the hex nut down the M3 jackscrew until it is next to the M3 adapter.

3.3.3 Apply a coating of lubricant to the torque shaft holes located on each side of housing (1-10).

3.3.4 Coat o-ring seals (2-20) with lubricant and install in the grooves located in the torque shaft through holes located on each side of housing (1-10).

NOTE:

The cup of rod wiper seal will be installed facing down into the housing.

3.3.5 Coat yoke (1-20) with lubricant and install into housing (1-10). Apply a generous amount of lubricant to the slots in the arms of yoke (1-20).

3.3.6 Insert the yoke key spring (1-50), with the ends pointing down, into the slot in the torque shaft (1-30) and place the yoke key (1-40) on top of the spring with the tapered side outward.

⚠ WARNING: FOLLOW YOKE KEY INSTALLATION STEPS

If the yoke key (1-40) is installed incorrectly the housing may be damaged when next disassembly occurs. Refer to assembly drawing for correct yoke key spring and yoke key orientation.

3.3.7 Hold the yoke key (1-40) down with your thumb; insert the torque shaft (1-30) by gently rotating it into the housing (1-10) and yoke (1-20) on the opposite side of the installed o-ring seal (2-20).

⚠ CAUTION: CHECK YOKE KEY ALIGNMENT

Rotate the torque shaft until the yoke key snaps into the yoke keyway.

NOTE:

Two new retaining rings (1-60) and washers (1-65) are contained in the Bettis CBB Service Kits.

3.3.8 Install one of the new retaining ring (1-60) and washer (1-65) onto the exposed end of the torque shaft, making certain it is properly seated in the groove of the torque shaft (1-30). Gently push and rotate the torque shaft (1-30).

3.3.9 Rotate the torque shaft (1-30) so that the arms of yoke (1-20) point out the open end of housing (1-10).

3.3.10 Coat O-ring seal (5-20) with lubricant and install in the internal seal groove of the center bar "hole" located in housing (1-10).

3.3.11 Coat the following areas of piston (4-50) with lubricant: The outer diameter seal groove, inner diameter seal groove, head of piston and exposed ends of yoke pin.

3.3.12 Coat o-ring seal (5-20) with lubricant and install in the internal seal groove in the head of piston (4-50).

3.3.13 Coat piston seal (5-40) with lubricant and install into outer diameter seal groove of piston (4-50). The piston seal will fit very loosely in the outer diameter seal groove.

3.3.14 Coat entire length of center bar (8-10) with lubricant, including the threads.

3.3.15 Install piston (4-50) onto center bar (8-10).

3.3.16 Install bushing (4-80) between the two arms of yoke (1-20).

3.3.17 With the piston head facing away from housing (1-10) and with yoke pin up, install center bar (8-10) in the open end of housing (1-10) and push the center bar through the center bar "hole" of housing (1-10).

3.3.18 Install hex nut (8-20) onto one end of center bar (8-10) that is protruding through the center bar "hole" of housing (1-10).

3.3.19 Carefully slide piston (4-50) along center bar (8-10) until yoke pin engages the two slots in the arms of yoke (1-20).

NOTE:

While holding the center bar flush against the housing, push piston (4-50) into housing (1-10) as far as the piston will go. Check to see that bushing (4-80) is positioned between the yoke (1-20) and the stem of piston (4-50).

3.3.20 Coat one o-ring seal (5-10) with lubricant and install onto outer diameter flange located on housing adapter end of housing (1-10).

3.3.21 Actuators equipped with cylinder adapter (4-15), models CBB520 and 725, do steps as follows:

3.3.21.1 Install cylinder adapter (4-15) onto the flange of housing (1-10) and over o-ring seal (5-10), with the stepped outer diameter, of cylinder adapter (4-15), facing away from housing (1-10).

3.3.21.2 Install one o-seal (5-15) onto stepped diameter of cylinder adapter (4-15).

3.3.22 Apply a coating of lubricant to entire bore of cylinder (4-10).

MECATORK S.A.S
ACTIONNEURS PNEUMATIQUES ¼ DE TOUR
ACTIONNEURS ELECTRIQUES
ENSEMBLES VANNES MOTORISEES
Tel : 04 50 66 70 42
Fax: 04 50 45 21 53
www.mecatork.fr

3.3.23 Pneumatic cylinder installation:

3.3.23.1 For CBB520 and 725 models, install the lubricated cylinder (4-10) over the piston and up-against the o-ring seal (5-15) on the stepped diameter flange of cylinder adapter (4-15).

3.3.23.2 For CBB315, 420 and 525 models install the lubricated cylinder (4-10) over the piston and up-against the o-ring seal (5-10) on the flange of housing (1-10).

3.3.24 Coat o-ring seal (5-20) with lubricant and install into internal diameter seal groove of the end cap (4-20).

3.3.25 **M3 JACKSCREW (4-30) END CAP INSTALLATION FOR** CBB315/415-M3 MODEL ACTUATORS (includes –M3HW models).

3.3.25.1 Apply a light coating of lubricant to the threads of M3 jackscrew (4-30).

NOTE:

The M3 jackscrew will be installed from the cylinder side of end cap (4-20).

3.3.25.2 Install and rotate M3 jackscrew (4-30) into end cap (4-20).

NOTE:

Rotate the M3 jackscrew into the end cap (4-20) until the inboard end of the M3 jackscrew is up against the end cap (4-20).

3.3.25.3 Install seal (5-30) onto M3 jackscrew (1-70).

NOTE:

Move the O-ring seal (2-30) down the M3 jackscrew until it is next to the end cap (4-20).

3.3.25.4 Install hex nut (4-40) and washer (5-90) onto M3 jackscrew (4-30).

NOTE:

Rotate the hex nut down the M3 jackscrew until it is next to the end cap (4-20).

3.3.25.5 Continue reassembly at step 3.3.27.

3.3.26 **M3 JACKSCREW END CAP (4-20) INSTALLATION FOR** CBB420-M3 THRU CBB725-M3 MODEL ACTUATORS (includes –M3HW models).

3.3.26.1 Apply a coating of lubricant to outer diameter and inner diameter threads of M3 adapter (4-55).

3.3.26.2 Coat o-ring seal (5-45) with lubricant and install into outer diameter seal groove located in the M3 adapter (4-55).

3.3.26.3 Apply a light coating of lubricant to the threads of M3 jackscrew (4-30).

3.3.26.4 Install and rotate M3 jackscrew (4-30) into M3 adapter (4-55).

NOTE:

Rotate the M3 jackscrew into the M3 adapter (4-55) until the inboard end of the M3 jackscrew is up against the M3 adapter (4-55).

NOTE:
The M3 adapter will be installed from the cylinder side of end cap (4-20).

3.3.26.5 Install M3 adapter (4-55) into end cap (4-20).

3.3.26.6 Install retainer ring (5-60) into outboard groove located on outer diameter of M3 adapter (4-55).

3.3.26.7 Install thread seal (5-30) onto M3 jackscrew (1-70).

NOTE:
Move the thread seal (5-30) down the M3 jackscrew until it is next to the M3 adapter (4-55).

3.3.26.8 Install hex nut (4-40) and csk washer (5-35) onto M3 jackscrew (1-70).

NOTE:
Rotate the hex nut down the M3 jackscrew until it is next to the M3 adapter (4-55).

3.3.27 End cap outer diameter seal installation.

3.3.27.1 For CBB415/520/725 models install O-ring seal (5-15) onto the outer diameter of end cap (4-20).

3.3.27.2 For CBB315/420/525 models install O-ring seal (5-10) onto the outer diameter of end cap (4-20).

NOTE:
Position the end cap (4-20) so that the inlet port is at the bottom and the M3 jackscrew (4-30) is at the top of the actuator.

3.3.28 Install end cap (4-20) onto center bar (8-10) and cylinder (4-10).

⚠ WARNING: FOLLOW STEPS CORRECTLY

If step 3.3.29 is not completed as described the center bar o-ring seals (5-20) may become a source of pressure leakage and cause the actuator to fail.

3.3.29 Install the second hex nut (8-20) onto the cylinder end of center bar (8-10). Adjust the two hex nuts (8-20) such that the approximate same number of threads is exposed on the ends of the center bar (8-10).

⚠ WARNING: DO NOT ALLOW END CAP TO ROTATE

Do not allow end cap (4-20) to rotate during center bar tightening. The end cap must maintain the position as described in step 3.3.27. M3 jackscrew must be installed to be in alignment with the target located on the piston assembly (4-50).

MECATORK S.A.S
ACTIONNEURS PNEUMATIQUES ¼ DE TOUR
ACTIONNEURS ELECTRIQUES
ENSEMBLES VANNES MOTORISEES
Tel : 04 50 66 70 42
Fax: 04 50 45 21 53
www.mecatork.fr

3.3.30 Tighten center bar hex nuts (8-20) to the proper torque as specified in the following chart.

Table 4. Tightning Torque Center Bar

CBB actuator Model	Maximum Torque	
	FT. LBS.	N-m
315	55	75
420 AND 520	100	136
525 AND 725	130	176

3.3.31 Adjust both M3 jackscrews (4-30) and (1-70) back to setting recorded in Section 2 step 2.1.2 under General Disassembly. Tighten both M3 jackscrew hex nuts (4-40) and (1-80) securely, while holding M3 jackscrews (1-70).

3.3.32 M3 hex drive hub or hand wheel installation as follows:

3.3.32.1 Install hex drive hub (12-10) or hand wheel (12-10) onto M3 jackscrews (4-30) and (1-70) and align the “hole” of the drive hub with the “hole” located in the outboard end of M3 jackscrews (4-30) and (1-70).

3.3.32.2 Install retainer ring (12-30) and groove pin (12-20) into the hex drive hub (12-10) or hand wheel (12-10).

MECATORK S.A.S
ACTIONNEURS PNEUMATIQUES ¼ DE TOUR
ACTIONNEURS ELECTRIQUES
ENSEMBLES VANNES MOTORISEES
Tel : 04 50 66 70 42
Fax: 04 50 45 21 53
www.mecatork.fr

Section 4: Actuator Testing

4.1 Actuator Testing

4.1.1 Leak Test - General - A small amount of leakage may be tolerated. Generally, a small bubble which breaks about three seconds after starting to form is considered acceptable.

4.1.2 All areas, where leakage to atmosphere may occur, are to be checked using a commercial leak testing solution.

⚠ WARNING: FOLLOW SERIAL TAG INFORMATION

Pressure is not to exceed the maximum operating pressure rating listed on the serial number tag (20).

4.1.3 All leak testing will use the customer normal operating pressure or the actuator name tag normal operating pressure (NOP).

NOTE:

When testing the actuator use a proper adjusted regulator to apply pressure to the actuator.

4.1.4 Before testing for leaks, apply and release the pressure listed in step 4.1.3 to both sides of the piston. Repeat this cycle approximately five times. This will allow the new seals to seek their service condition.

4.1.5 Apply the pressure listed in step 4.1.3 to the housing side of the piston and allow the actuator to stabilize.

4.1.6 Apply a leak testing solution to the following areas:

- 4.1.6.1 Cylinder to housing joint on CBB315, 420, and 525 or cylinder to cylinder adapter to housing joints on CBB520 and 725 actuators.
- 4.1.6.2 On the outboard end of housing (1-10) at the center bar hex nut. Check the center bar to housing O-ring seal (5-20).
- 4.1.6.3 Housing stop screw / ES / M3 jackscrew O-ring seal (2-30).
- 4.1.6.4 Torque shaft (1-30) to housing (1-10) interface. Check o-ring seals (2-25) and (2-20).
- 4.1.6.5 End cap (4-20) port “hole”. Checks the piston to cylinder seal (5-40) and piston to center bar seal (5-20).
- 4.1.6.6 Remove pressure from pressure inlet port in the housing (1-10).

4.1.7 Apply the pressure listed in step 4.1.3 to the end cap inlet port and allow the actuator to stabilize.

4.1.8 Apply a leak testing solution to the following areas:

- 4.1.8.1 Cylinder to end cap joint. Check O-ring seal (5-10) on CBB315, 420, and 525 or check O-ring seal (5-15) on CBB520 and 725 actuators.
- 4.1.8.2 Housing (4-10) inlet port hole. Checks the piston to cylinder seal (5-40) and piston to center bar seal (5-20).
- 4.1.8.3 End cap stop screw or M3 jackscrew O-ring seal.
- 4.1.8.4 Remove pressure from pressure inlet port in the end cap (4-20).

MECATORK S.A.S
ACTIONNEURS PNEUMATIQUES ¼ DE TOUR
ACTIONNEURS ELECTRIQUES
ENSEMBLES VANNES MOTORISEES
Tel : 04 50 66 70 42
Fax: 04 50 45 21 53
www.mecatork.fr

4.1.9 If an actuator was disassembled and repaired as a result of this procedure, the above leakage test must be performed again.

4.1.10 After the actuator is installed back on the valve all accessories should be hooked up and tested for proper operation and replaced, if found defective.

MECATORK S.A.S
ACTIONNEURS PNEUMATIQUES ¼ DE TOUR
ACTIONNEURS ELECTRIQUES
ENSEMBLES VANNES MOTORISEES
Tel : 04 50 66 70 42
Fax: 04 50 45 21 53
www.mecatork.fr

Section 5: Document Revision

Table 5. Revision Overview

ECN	DATE	REV		BY *	DATE
0526 001	May 2012	0	COMPILED	C.Rico	5/18/12
			CHECKED	B. Jumawan	8/21/12
			APPROVED	B. Jumawan	9/26/12

* Signatures on file Bettis Actuator & Controls, Waller, Texas

Appendix A: List of Tables

Table 1 CBB Model Numbers 1
Table 2 Actuator Weight..... 4
Table 3 Tightning Torque Center Bar..... 12
Table 4 Tightning Torque Center Bar..... 17
Table 5 Revision Overview 20

Appendix B: List of Drawings

B.1 Part No. VA001-005-72-3, CBBXXX Assembly Drawing

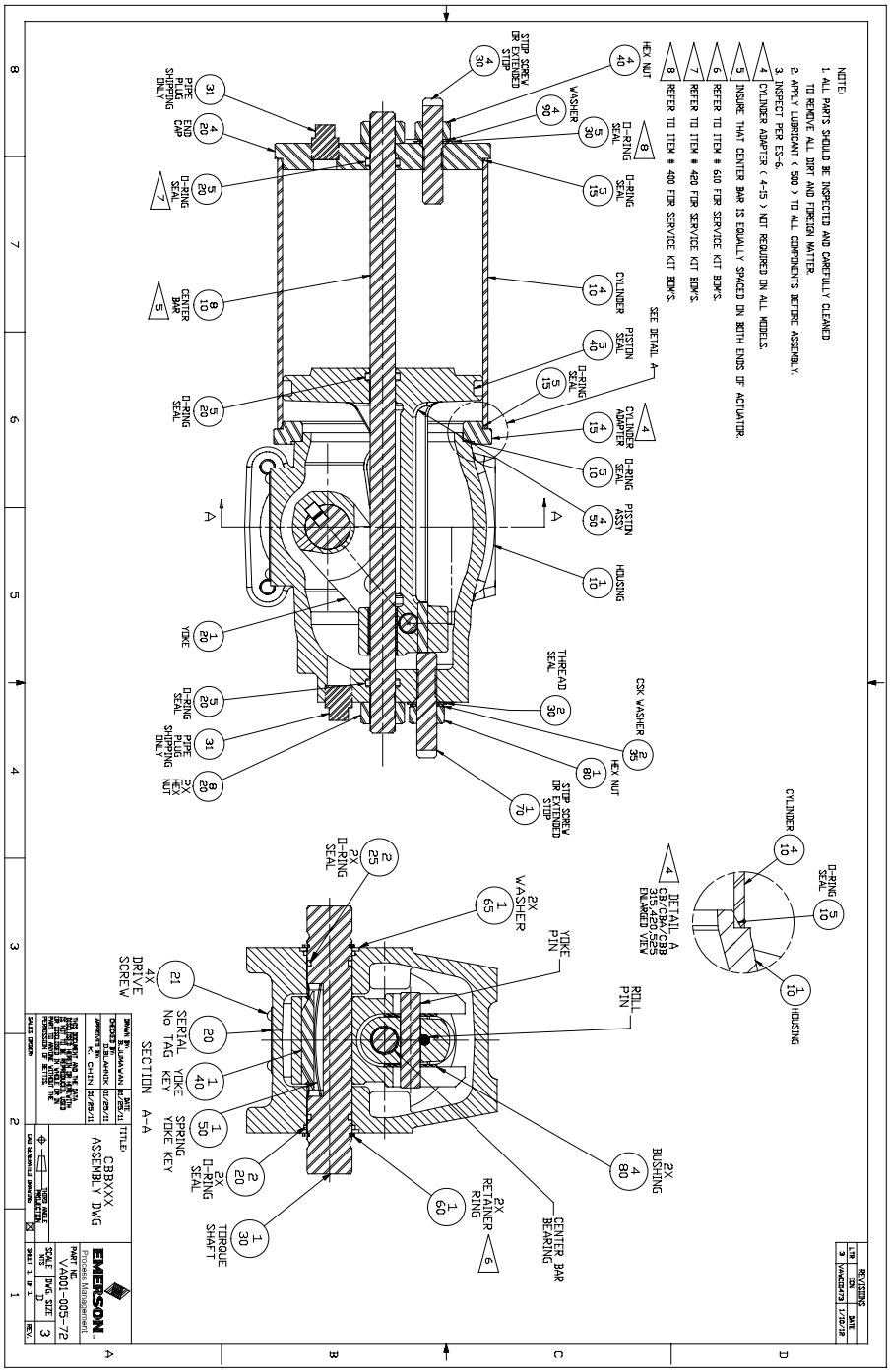

B.2 Part No. VA001-005-73-1, CBBXXX-M3HW Assembly Drawing

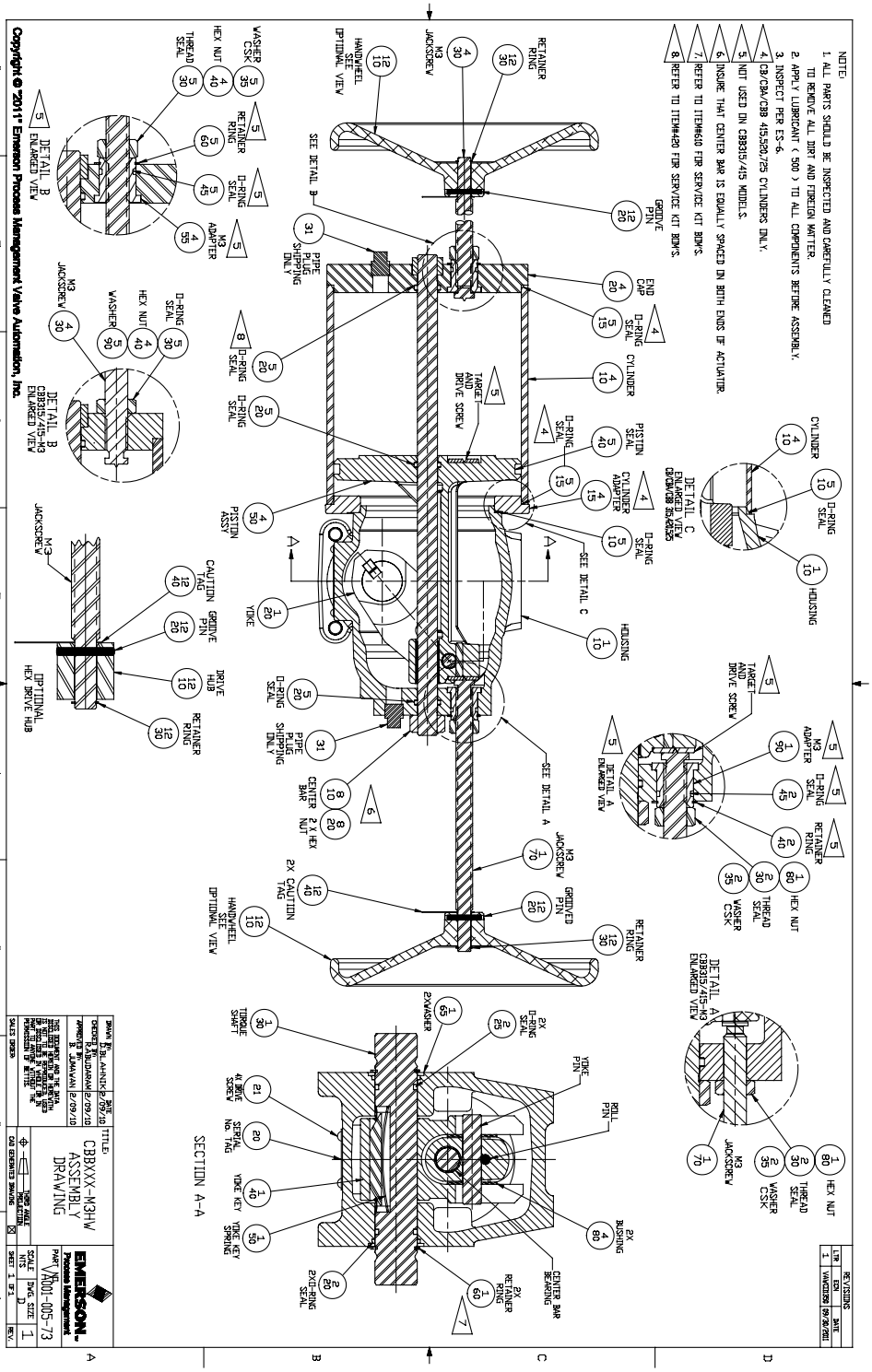

HYTORK
ELOMATIC-BETTIS

MECATORK

ACTIONNEURS PNEUMATIQUES ¼ DE TOUR

ACTIONNEURS ELECTRIQUES

ENSEMBLES VANNES MOTORISEES

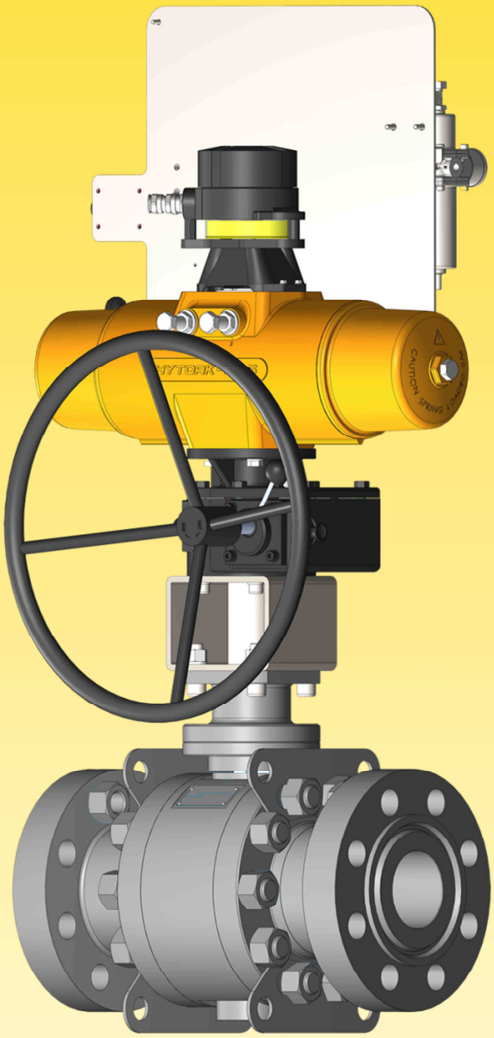

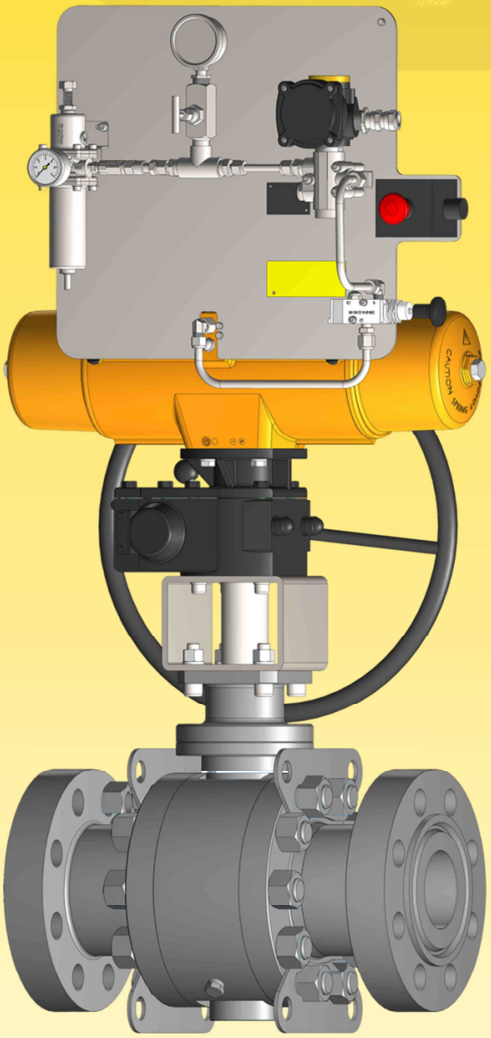

Notre Savoir-Faire

La motorisation pneumatique et électrique
de tout type de vanne 1/4 de tour
dans de multiples secteurs d'activité selon vos spécifications

info@mecatork.fr - 04 50 66 70 42